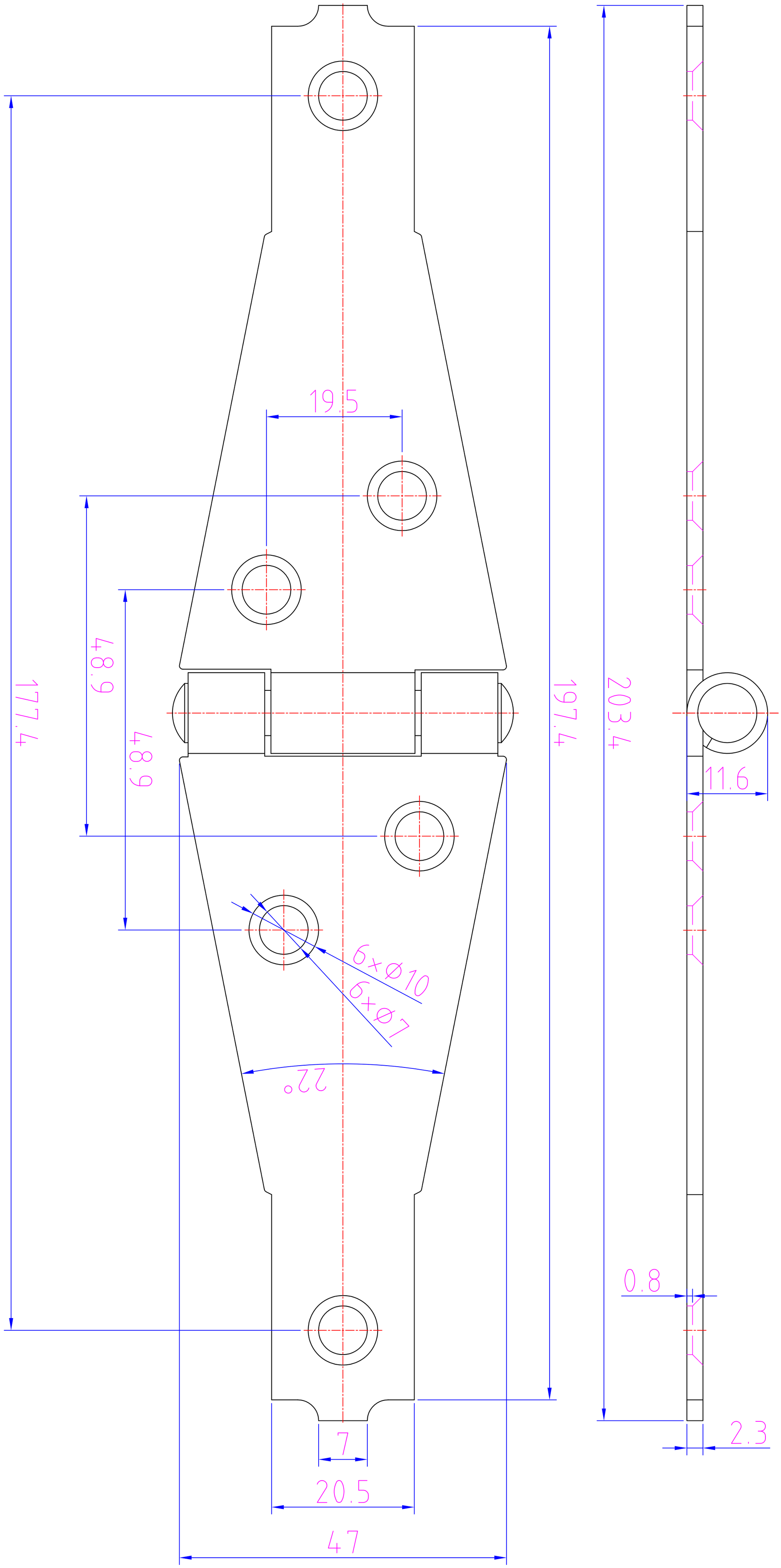
19.5
177.4
48.9
48.9
197.4
203.4
11.6
6×Ø10
6×Ø7
22°
0.8
2.3
7
20.5
47