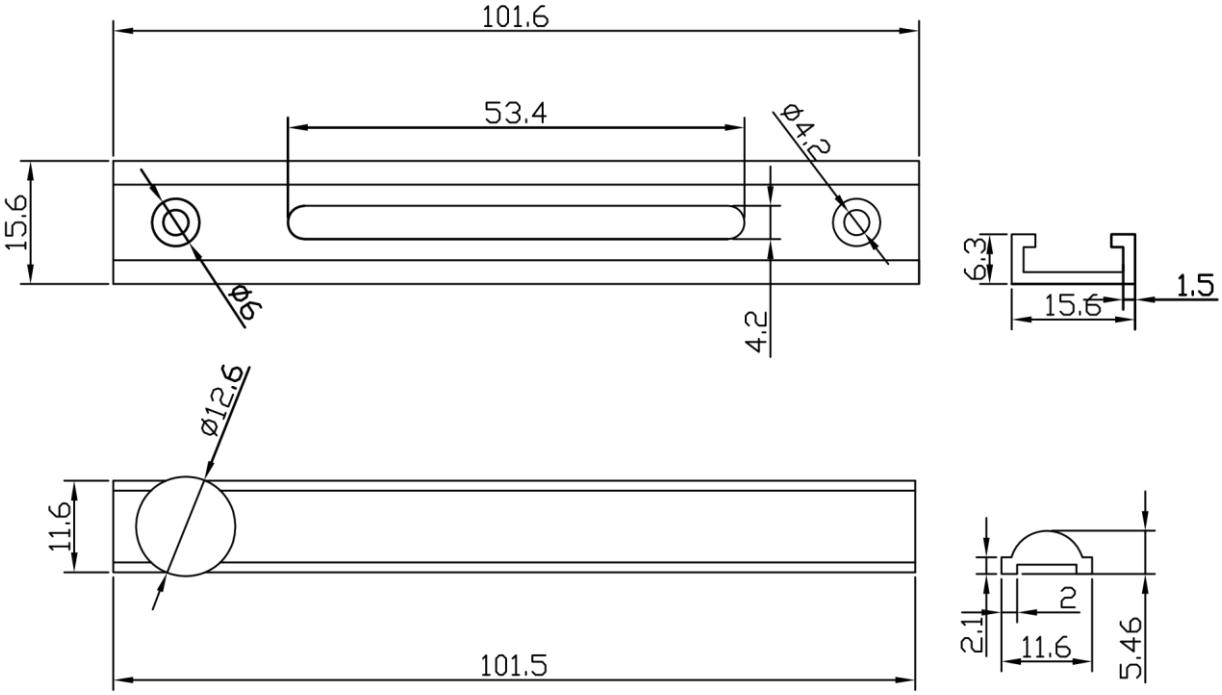
101.6
53.4
ø4.2
15.6
ø6
4.2
6.3
15.6
1.5
ø12.6
11.6
101.5
2
2.1
11.6
5.46

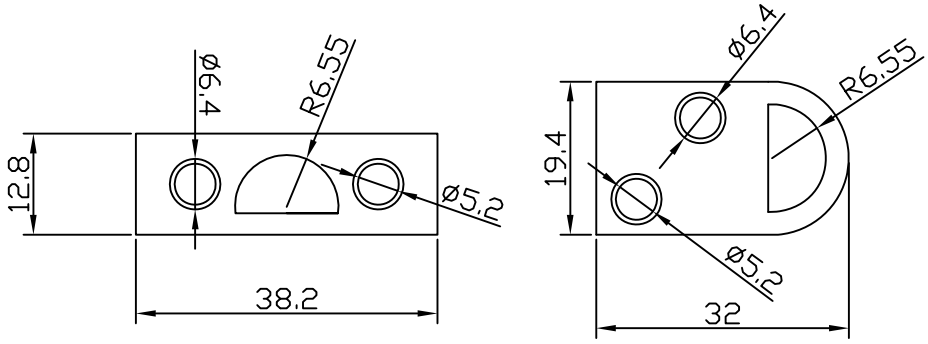
ø6.4
R6.55
12.8
ø5.2
38.2
ø6.4
R6.55
19.4
ø5.2
32