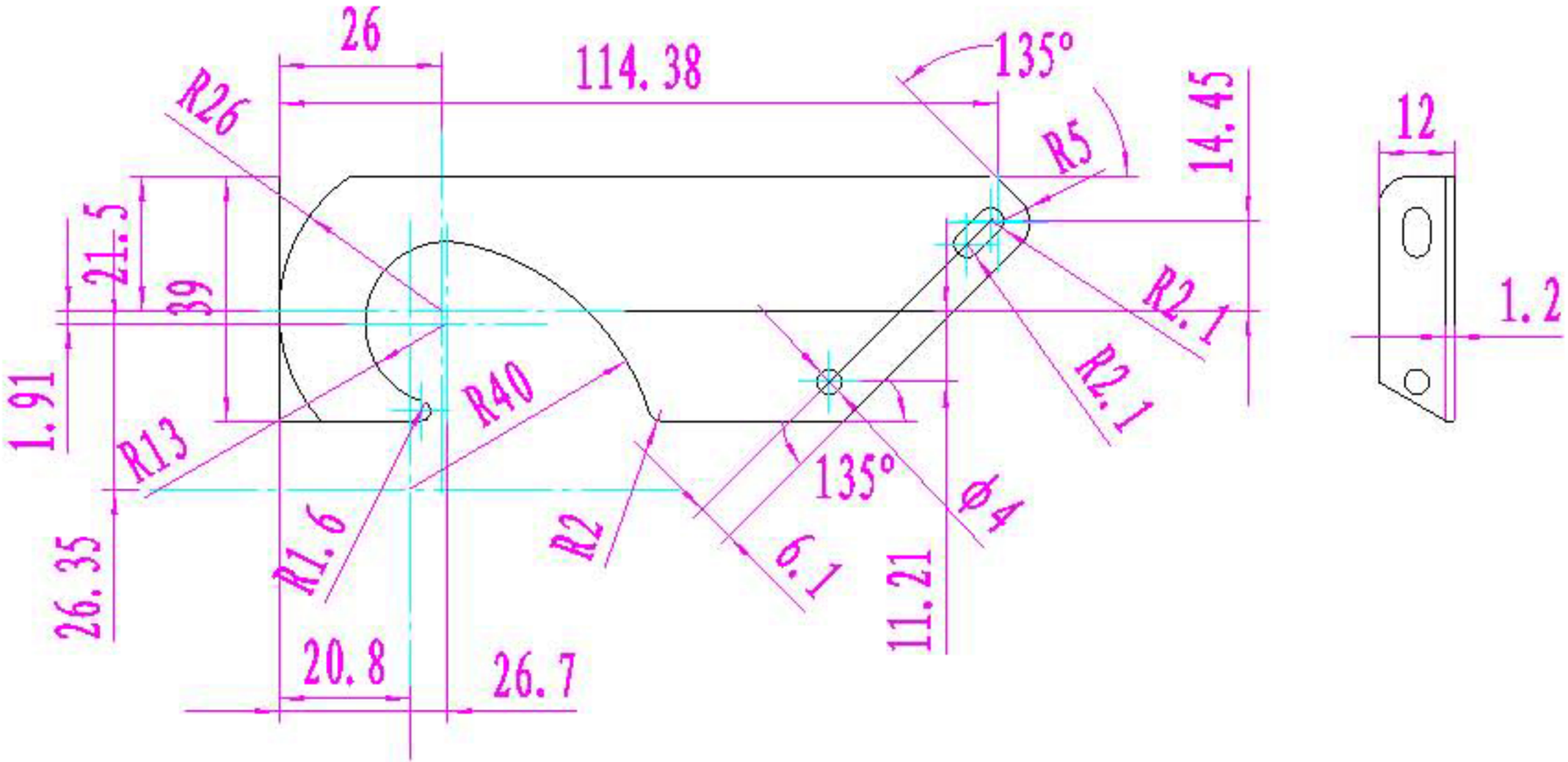
26
114.38
135°
R26
R5
14.45
12
21.5
39
R2.1
1.2
1.91
R40
R2.1
R13
135°
φ4
R1.6
R2
6.1
11.21
26.35
20.8
26.7